Index

Page	Schematics Page Name
01	Cover Sheet / Revision History
02	Top Level
03	
04	
05	
06	
07	
08	
09	
10	

01_Revision_History.SchDoc

Revision History

Rev.	Rel.	Date	Author	Description	Page(s)
1.1	RC00	2018-12	GW	- Bugfix	
2.0	RC00	2020-11	GF	- New sensing stucture; new TDSO footprint; bugfixes	
2.1	RC00	2021-03	GF	- Removed GND plane, satellite sensor configuration	
2.2	RC00	2021-07	GF	- Restored GND plane for better dI/dt immunity	
2.3	RC00	2021-10	GF	- Introduced LDO for better supply stability.	

TLE4972 TDSO16 StandardPCB S-Bend Evaluation Board

Default_Assembly

2.3

Infineon Technologies AG
IFAT DC ATV SC MSS TM
Siemensstraße 2, 9500 Villach, Austria

10/2021

Link to Top Level Document

02 Top Level
02_Top_Level.SchDoc

LEGAL DISCLAIMER
THE INFORMATION GIVEN IN THIS DOCUMENT IS GIVEN FOR ILLUSTRATING PURPOSES ONLY. THE RECIPIENT OF THIS DOCUMENT MUST VERIFY ANY FUNCTION DESCRIBED HEREIN IN THE REAL APPLICATION. INFINEON TECHNOLOGIES HEREBY DISCLAIMS ANY AND ALL WARRANTIES AND LIABILITIES OF ANY KIND (INCLUDING WITHOUT LIMITATION WARRANTIES OF NON-INFRINGEMENT OF INTELLECTUAL PROPERTY RIGHTS OF ANY THIRD PARTY) WITH RESPECT TO ANY AND ALL INFORMATION GIVEN IN THIS DOCUMENT.

Infineon Technologies AG
IFAT DC ATV SC MSS TM
Siemensstraße 2, 9500 Villach, Austria

Title	TLE4972 TDSO16 StandardPCB S-Bend Evaluation Board		
Variant	Default_Assembly	Approved	<Appr.>
Size: A3	Document Name: 01_Revision_History.SchDoc	Rel.	Rev. 2.3
Date: 11.10.2021	Time: 17:22:26	Author: GF	Sheet of 3

© Infineon Technologies AG 2021. All Rights Reserved.

02_Top_Level.SchDoc

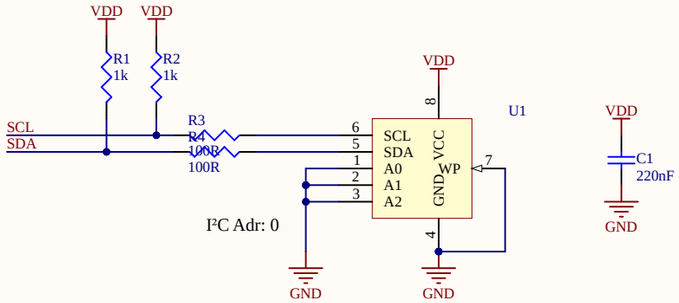

RS: #686-2374

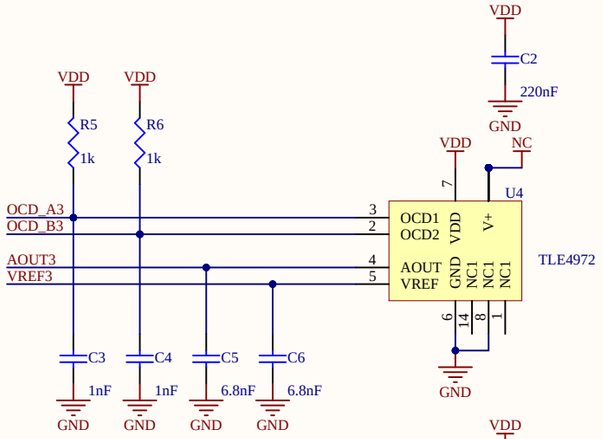

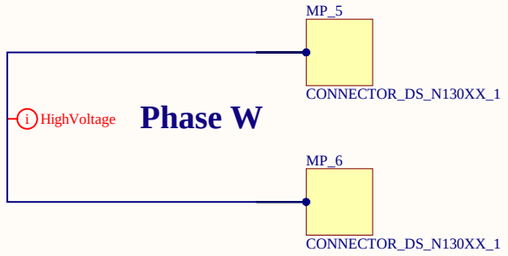

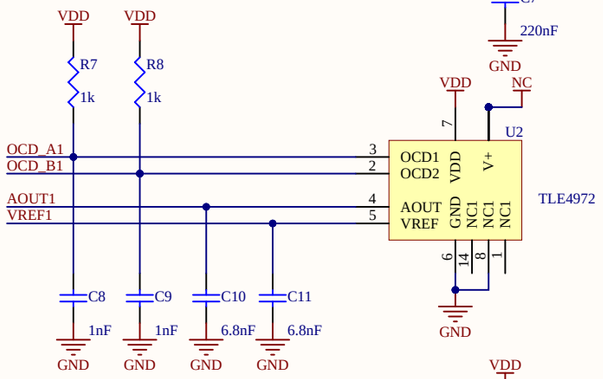

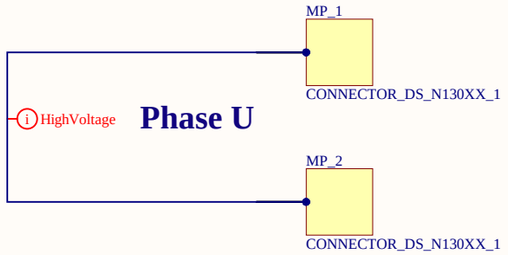

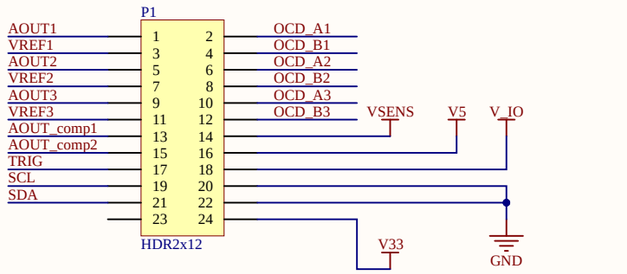

RS: #823-6563

Kabel: Farnell: #2619388

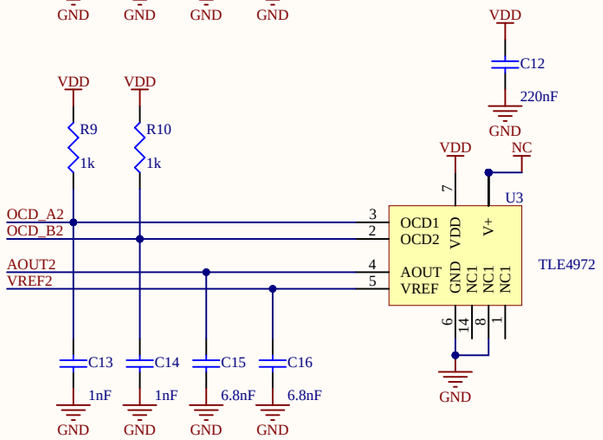

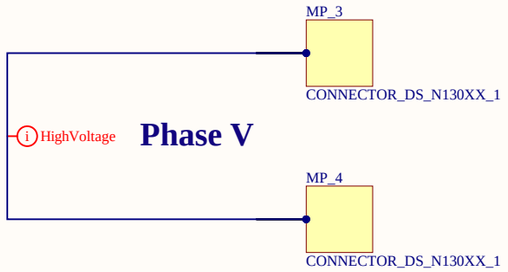

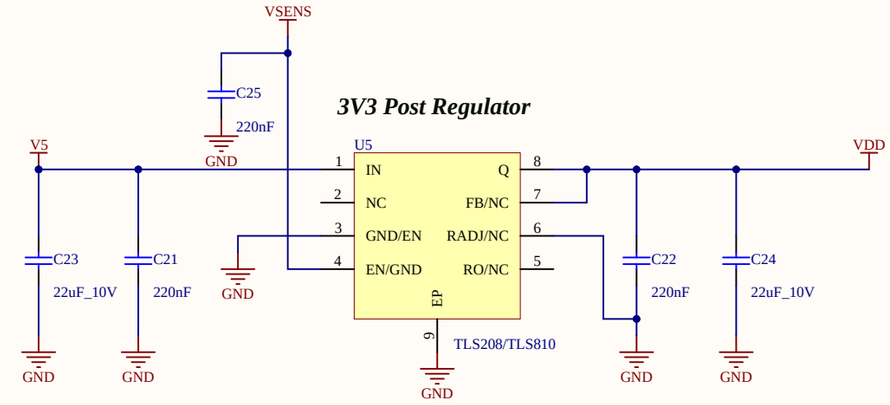

Miscellaneous
Miscellaneous.SchDoc

Infineon Technologies AG IFAT DC ATV SC MSS TM Siemensstraße 2, 9500 Villach, Austria			
Title	TLE4972 TDSO16 StandardPCB S-Bend Evaluation Board		
Variant	Default_Assembly	Approved	<Appr.>
Size: A3	Document Name: 02_Top_Level.SchDoc	Rel.	Rev. 2.3
Date: 11.10.2021	Time: 17:22:26	Author: GF	Sheet of 3

© Infineon Technologies AG 2021. All Rights Reserved.

Miscellaneous.SchDoc

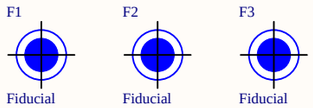

BOM Report Configuration



Note!
This component is used to define BOM report configuration.
If this component is deleted before other components from database are placed in this project, the BOM report configuration gets lost!

Infineon Technologies AG
IFAT DC ATV SC MSS TM
Siemensstraße 2, 9500 Villach, Austria

Title	TLE4972 TDSO16 StandardPCB S-Bend Evaluation Board		
Variant	Default_Assembly	Approved	<Appr.>
Size: A3	Document Name: Miscellaneous.SchDoc	Rel.	Rev. 2.3
Date: 11.10.2021	Time: 17:22:27	Author: GF	Sheet of 3

© Infineon Technologies AG 2021. All Rights Reserved.

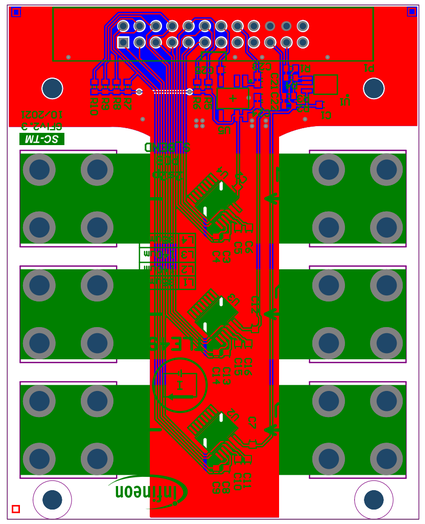

Layer	Name	Material	Thickness	Constant	Board Layer Stack	
	Top Overlay					
	Top Solder	Solder Resist	0.020mm	3.5		
1	L1_Top	copper	0.035mm			
	Prepreg1	FR4	0.115mm	4.6		
	Prepreg2	FR4	0.115mm	4.6		
2	L2_Middle	copper	0.140mm			
	Core	FR4	0.700mm	4.6		
3	L3_Middle	copper	0.140mm			
	Prepreg3	FR4	0.115mm	4.6		
	Prepreg4	FR4	0.115mm	4.6		
4	L4_Bottom	copper	0.035mm			
	Bottom Solder	Solder Resist	0.020mm	3.5		
	Bottom Overlay					

ENGINEER:	TITLE: TLE4972 TDS016 StandardPCB S-Bend Evaluation Board		
PCB DESIGNER: GF			
DATE: 11.10.2021	PART NO.:	REL.: <Rel>	REV.: <Rev>
SVN REVISION: Not in version control	FILE NAME: TLE4972_TDS0_StandardPCB_S-Bend.PcbDoc	APRV.: <Appr.>	SCALE: 1:1

Infineon Technologies AG
FAT DC ATV SC MSS TM
Am Campeon 1-12
85579 NEUBIBERG - GERMANY

© Infineon Technologies AG 2021. All Rights Reserved.

ENGINEER:	TITLE: TLE4972 TDS016 StandardPCB S-Bend Evaluation Board		
PCB DESIGNER: GF			
DATE: 11.10.2021	PART NO.:	REL.: <Rel>	REV.: <Rev>
SVN REVISION: Not in version control	FILE NAME: TLE4972_TDS0_StandardPCB_S-Bend.PcbDoc	APRV.: <Appr.>	SCALE: 1:1

Infineon Technologies AG
FAT DC ATV SC MSS TM
Am Campeon 1-12
85579 NEUBIBERG - GERMANY

© Infineon Technologies AG 2021. All Rights Reserved.

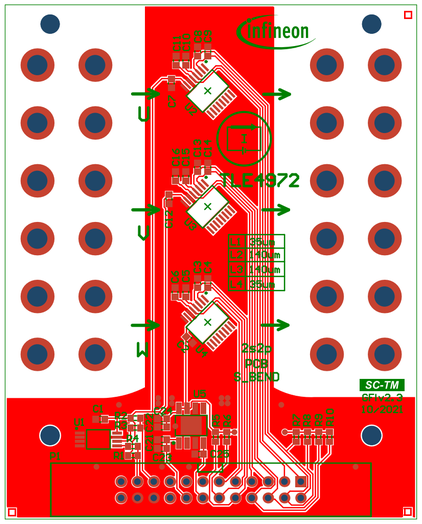

Infineon Technologies AG IFAT DC ATV SC MSS TM Am Campeon 1–12 85579 NEUBIBERG – GERMANY	ENGINEER:	TITLE: TLE4972 TDSO16 StandardPCB S–Bend Evaluation Board	
	PCB DESIGNER: GF		
	DATE: 11.10.2021	PART NO.:	REL: <Rel.> / REV: <Rev.>
	SVN REVISION: Not in version control	FILE NAME: TLE4972_TDSO_StandardPCB_S–Bend.PcbDoc	APRV: <Appr.> / SCALE: 1:1

©. Infineon Technologies AG 2021. All Rights Reserved.

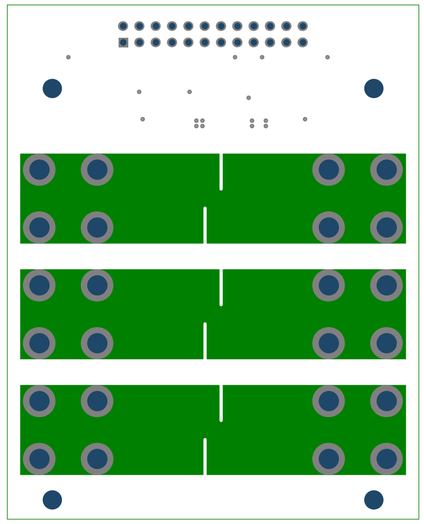

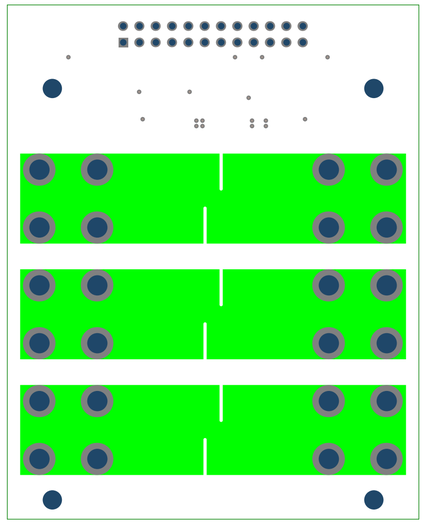

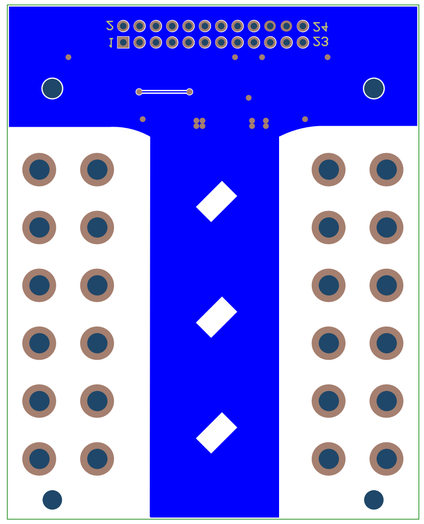

Infineon Technologies AG IFAT DC ATV SC MSS TM Am Campeon 1-12 85579 NEUBIBERG – GERMANY	Not in version control SVN REVISION:	ILE4972_TDSO_StandardPCB_S-BendPcbDoc FILE NAME:	<Appr.> APPR:	1:1 SCALE:
	11.10.2021 DATE:	PART NO.:	<Rel.> REL:	<Rev.> REV:
	CF PCB DESIGNER:	ILE4972 TDSO16 StandardPCB S-Bend Evaluation Board		
	ENGINEER:	TITLE:		

© Infineon Technologies AG 2021. All Rights Reserved.

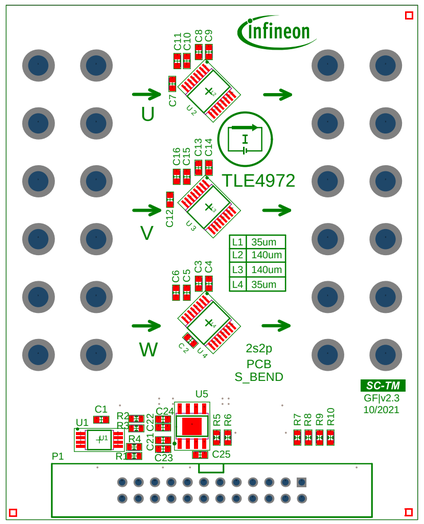

Infineon Technologies AG IFAT DC ATV SC MSS TM Am Campeon 1-12 85579 NEUBIBERG - GERMANY	ENGINEER:	TITLE: TLE4972 TDSO16 StandardPCB S-Bend Evaluation Board	
	PCB DESIGNER: GF		
	DATE: 11.10.2021	PART NO.:	REL: <Rel.> / REV: <Rev.>
	SVN REVISION: Not in version control	FILE NAME: TLE4972_TDSO_StandardPCB_S-Bend.PcbDoc	APRV: <Appr.> / SCALE: 1:1

© Infineon Technologies AG 2021. All Rights Reserved.

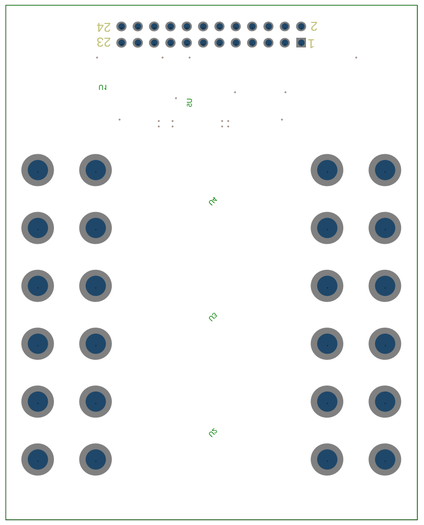

Infineon Technologies AG IFAT DC ATV SC MSS TM Am Campeon 1-12 85579 NEUBIBERG – GERMANY	Not in version control SVN REVISION:	ILE4972_TDSO_StandardPCB_S-BendPcbDoc FILE NAME:	<Appr.> APPV:	1:1 SCALE:
	11.10.2021 DATE:	PART NO.:	<Rel.> REL:	<Rev.> REV:
	CF PCB DESIGNER:	ILE4972 TDSO16 StandardPCB S-Bend Evaluation Board		
	ENGINEER:	TITLE:		

© Infineon Technologies AG 2021. All Rights Reserved.

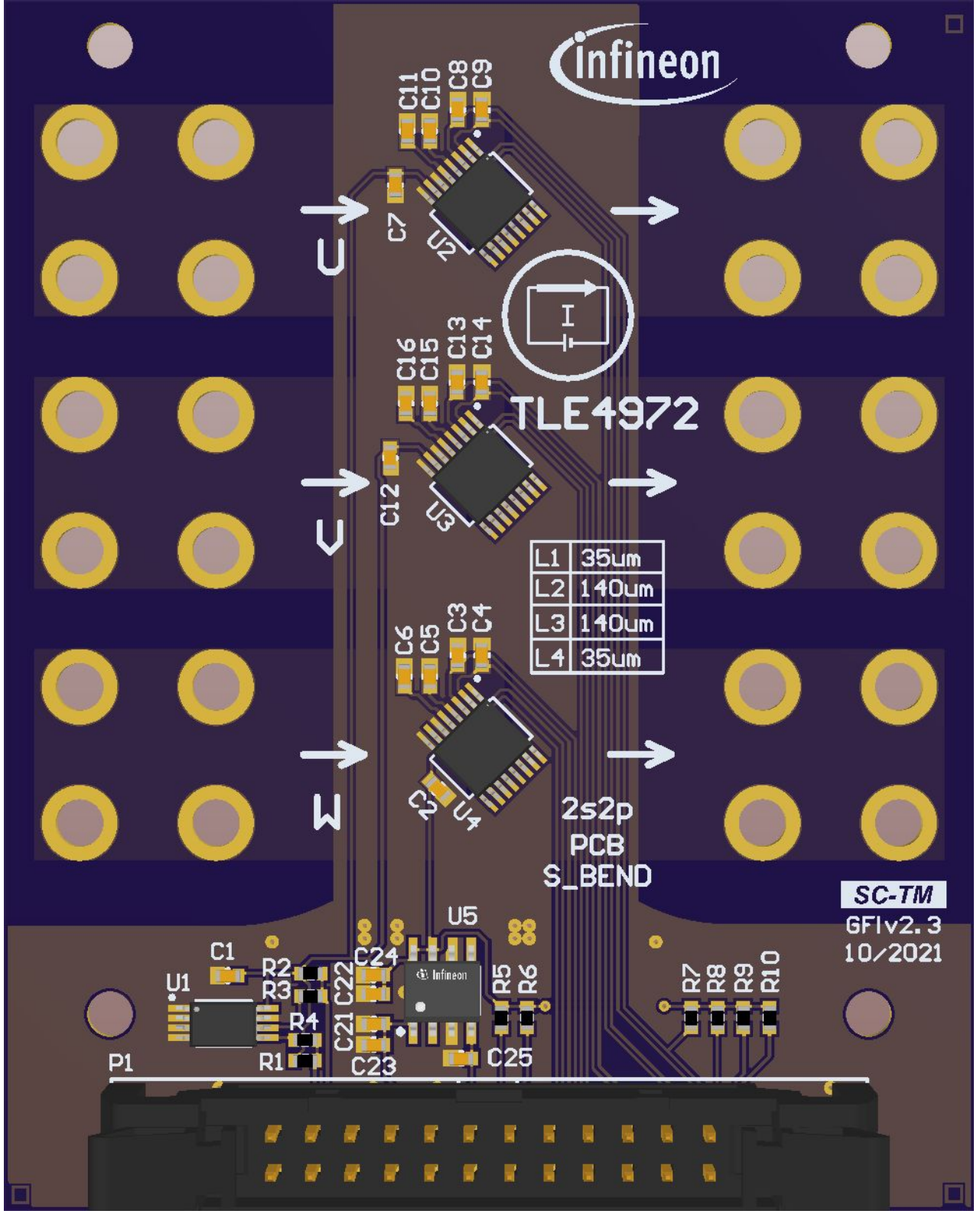
Infineon
TLE4972
U1
U2
U3
U4
U5
C1
C2
C3
C4
C5
C6
C7
C8
C9
C10
C11
C12
C13
C14
C15
C16
C21
C22
C23
C24
C25
R1
R2
R3
R4
R5
R6
R7
R8
R9
R10
P1
L1 35um
L2 140um
L3 140um
L4 35um
2s2p
PCB
S_BEND
SC-TM
GFIv2.3
10/2021

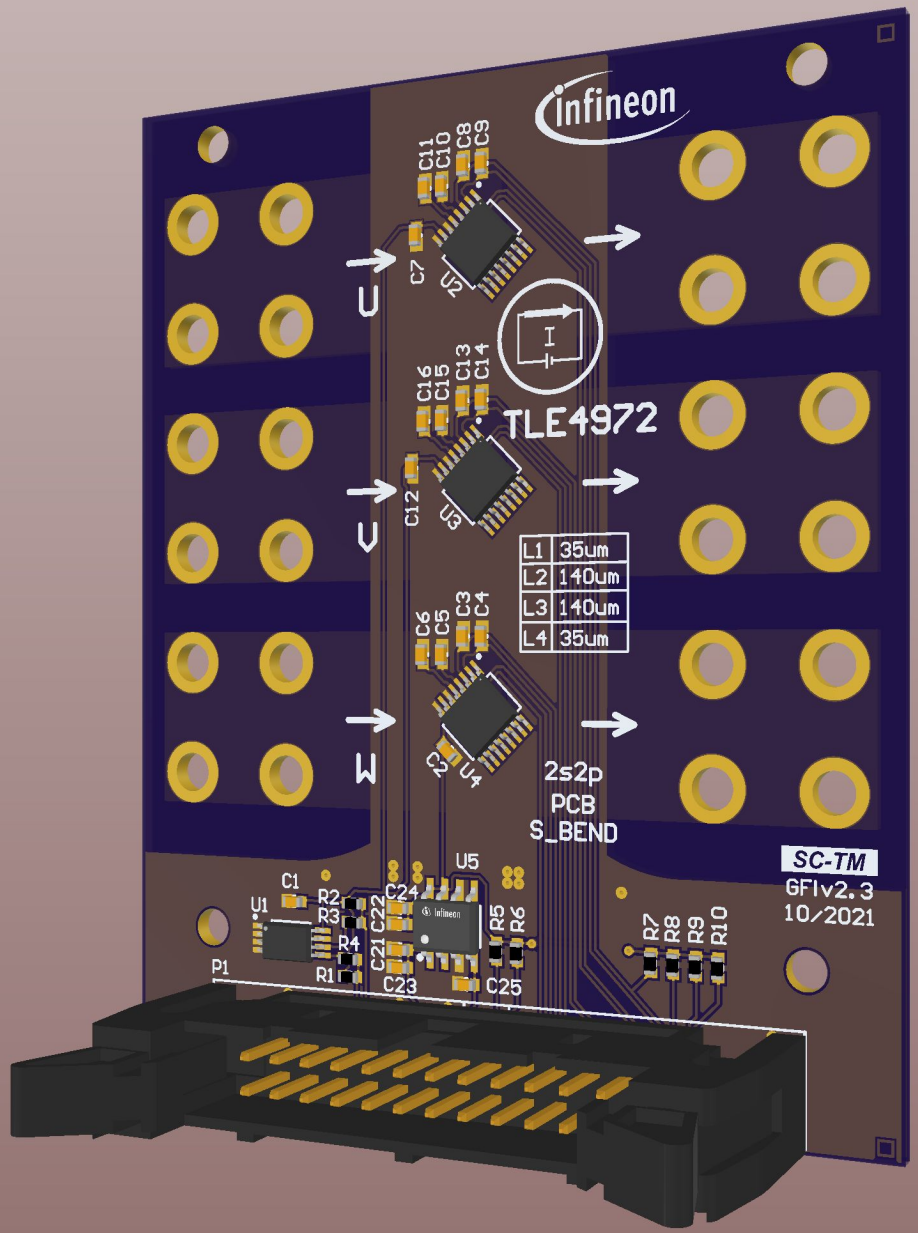
Infineon
TLE4972
U
V
W
L1 35um
L2 140um
L3 140um
L4 35um
2s2p
PCB
S_BEND
SC-TM
GFIv2.3
10/2021
P1